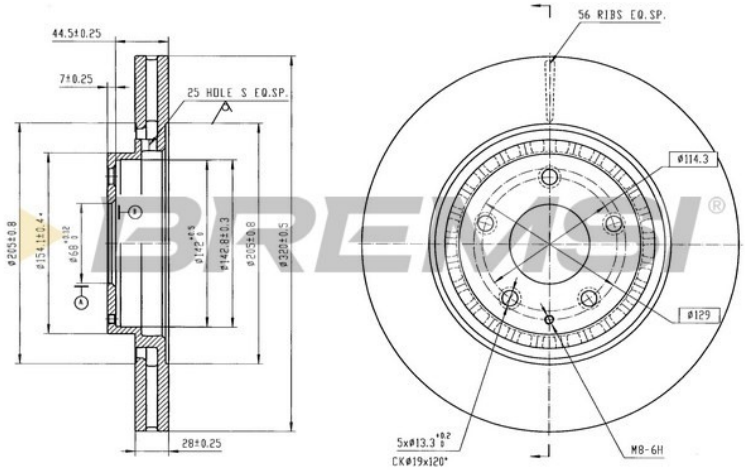

CD8888V BRAKING

Brake Discs

Description	B. DISC VOLVO
Availability	Incoming
EAN	8050141342905
Height [mm]	48
Brake Disc Type	Vented
Brake Disc Thickness [mm]	28
Minimum thickness [mm]	25,5
Number of Holes	5
Surface	Coated
Bore Ø [mm]	63,6
Bolt Hole Circle Ø [mm]	108,0

OEM

Brand	Reference
VOLVO	31423722

AM

Brand	Reference
ATE	24.0128-0305.1
BOSCH	0 986 479 H03
BREMBO	09.D250.11
BREMSI	CD8888V
CAR	142.2105
DELPHI	BG5000C
FERODO	DDF2888C
JURID	563626JC
KRUPP	DDF2888C
OPEN PARTS	BDR2888.20
REMSA	62124.10
SIGMAUTO	DBC888V
TEXTAR	92287505
TRW	DF8352S
ZIMMERMANN	610.3724.20
ZIMMERMANN	610.3724.52

Bremsi è un marchio registrato di FRENAUTO S.R.L. | P.IVA IT01706490388