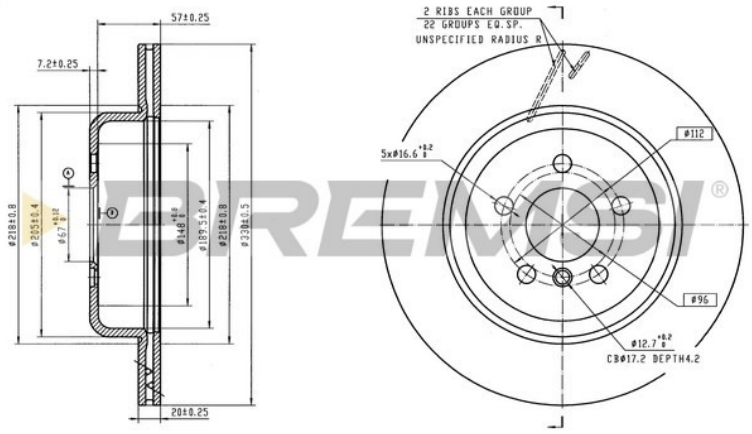

CD9042VRD **BRAKING**

Brake Discs

Description	B. DISC BMW
Availability	Available
EAN	8050141343513
Number of mounting bores	1
Surface	Coated
Centering Diameter [mm]	67
Number of Holes	5
Height [mm]	64
Bore Ø [mm]	67
Brake Disc Type	Vented
Brake Disc Thickness [mm]	20
Minimum thickness [mm]	18,4

OEM

Brand	Reference
BMW	34216882246
TOYOTA	42431WAA03

AM

Brand	Reference
ASHIKA	61-02-277C-KIT
BREMBO	09.D903.13
BREMSI	CD9042VRD
CAR	242.1955
FERODO	DDF3042RC-1
JAPANPARTS	dp-277c-kit
JAPKO	61277C-KIT
JURID	563686JC-1
KRUPP	DDF3042RC-1
SIGMAUTO	DBD042VRD
TRW	DF8646S
ZIMMERMANN	150.2953.20
ZIMMERMANN	150.2953.32
ZIMMERMANN	150.2953.52

Bremsi è un marchio registrato di FRENAUTO S.R.L. | P.IVA IT01706490388